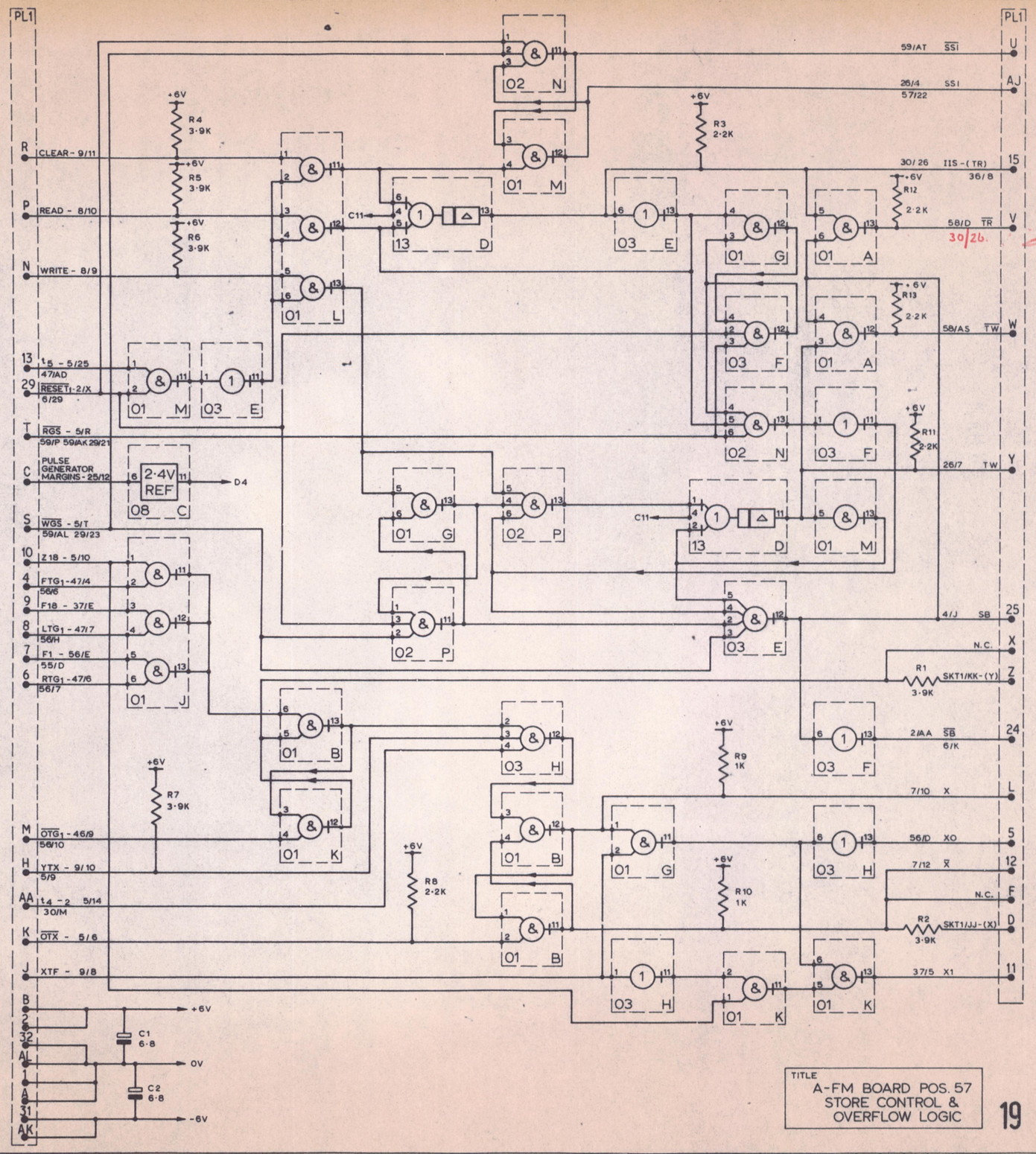

TITLE
A-FM BOARD POS. 57
STORE CONTROL &
OVERFLOW LOGIC

19

LATEST MI INCORPORATED: MI ~~2900~~ 2998

ISSUE No.	4	5
ALTN. No.	1740	1691
DATE	10-6-66	11-1-67
INITIALS	J.E.	
PARTS LIST No.		

DRAWN D&D | CHECKED Coll | APPROVED | DATE 7-11-66

MATERIAL | FINISH

© Elliott Brothers (London) Limited
THIS DRAWING IS THE PROPERTY OF ELLIOTT BROTHERS (LONDON) LIMITED AND MAY NOT BE COPIED USED OR DISCLOSED FOR ANY PURPOSE EXCEPT AS AUTHORISED IN WRITING BY ELLIOTT BROTHERS (LONDON) LIMITED

TOLERANCES
DECIMAL ±
FRACTIONAL ±
ANGULAR DIMENSIONS ±
UNLESS OTHERWISE STATED

ELLIOTT BROTHERS (LONDON) LTD

TITLE
A-FM BOARD POS. 57
STORE CONTROL &
OVERFLOW LOGIC

SCALE

DRAWING No. 322 D 5248